HMI Hoyme Manufacturing Inc. Special Note: Circuits are colored for clarification only and are not necessarily those found in actual installations.
Wires of the **Combustion Air Damper**, however, are **colored as shown**.

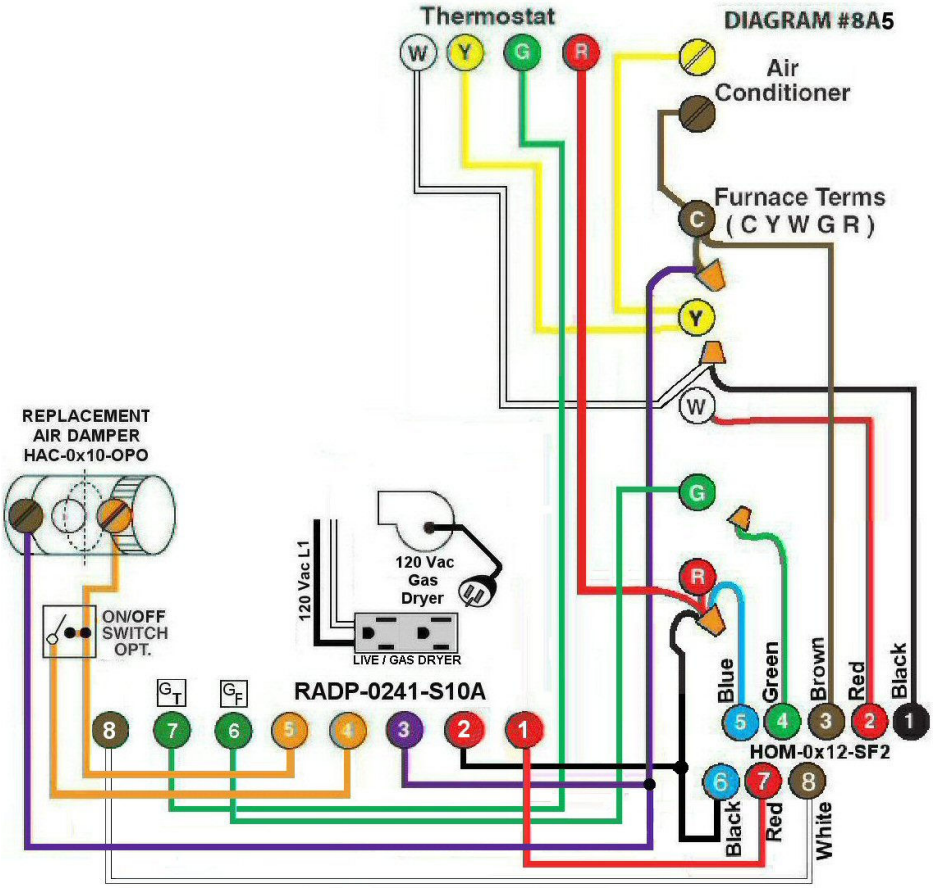

Diagram #8A5: A Forced Air Furnace having a **combustion air** supply duct and also a **replacement air** supply duct that provides additional air for a 120Vac **gas dryer** and for the normal operation of the home.

1. Combustion Air Damper **(HOM-0x12-SF2)** for two appliances.
2. 24Vac Relay Adaptor with a Duplex Receptacle and a Red Light on/off Switch **(RADP-0241-S10A)** to function as a control centre **interlocked** to120Vac supply for a plug-in type **Gas Dryer.**
3. Replacement Air Control Damper (**P**ower **O**pen) **HAC-0x10-OPO**

OPERATION:
1. Combustion Air Damper is **interlocked** to open for furnace firing and/or interlocked to open for dryer operation.
2. The **Gas Dryer** cord is plugged into the receptacle of the Adaptor **RADP-0241-S10A** and the Adaptor cord is plugged into wall outlet previously occupied by the dryer. The **Gas Dryer** will operate only after the Red Light Switch is turned **on** and the Combustion Air Damper is in the **open** position.
3. The **HAC-0x10-OPO** (**P**ower **O**pen) damper will open and close simultaneously with the Combustion Air Damper during the drying cycle. When the Dryer has completed its cycle, the Adaptor Red Light Switch is to be turned **off** allowing the Combustion Air Damper and the Replacement Air Damper to **close.**
The HAC Damper may be left open continually by using the **Optional on/off Switch.**

Note: This installation does not interfere with the normal operation of the heating cycle of the furnace or the cooling cycle of the air conditioner.

Additional Colored Wiring diagrams are shown on the web at www.hoyme.com